Installation Instructions
Tapered Radar Mast - PTM-R1/R2 & PTM-R1/R2-S40

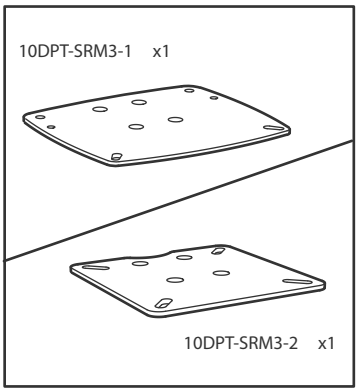

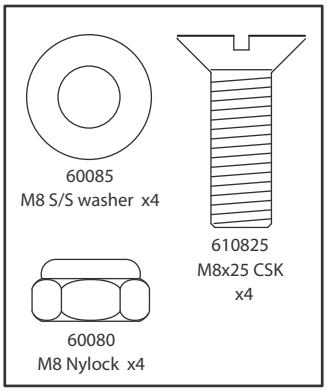

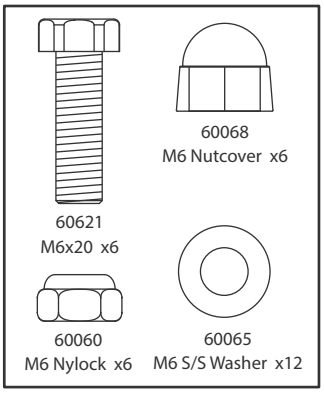

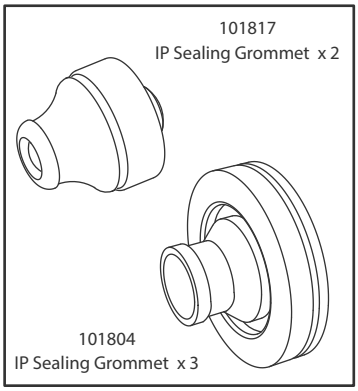

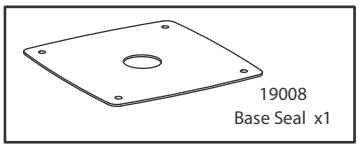

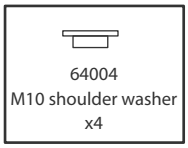

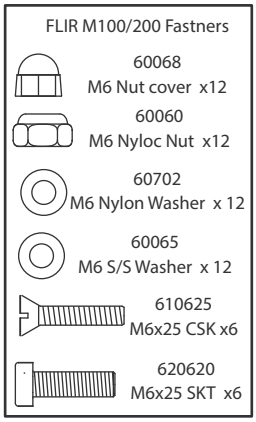

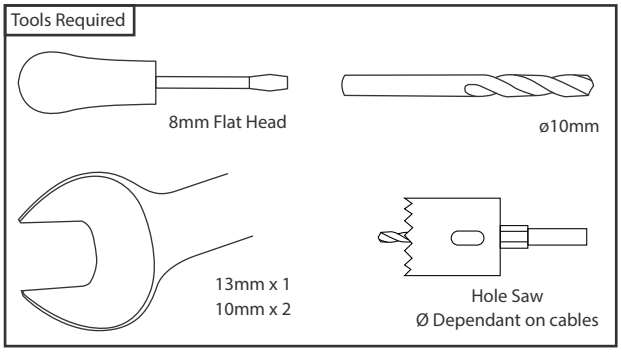

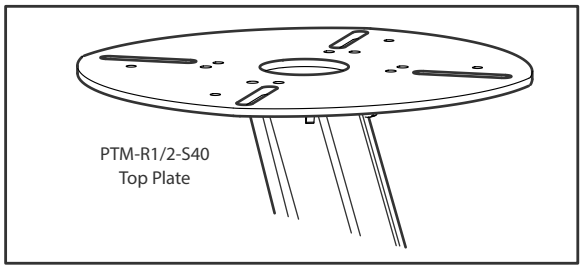

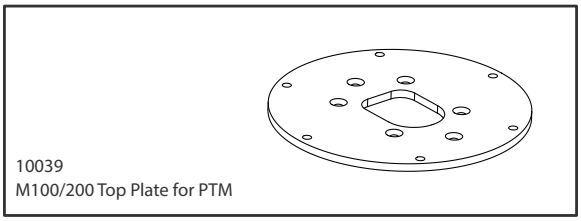

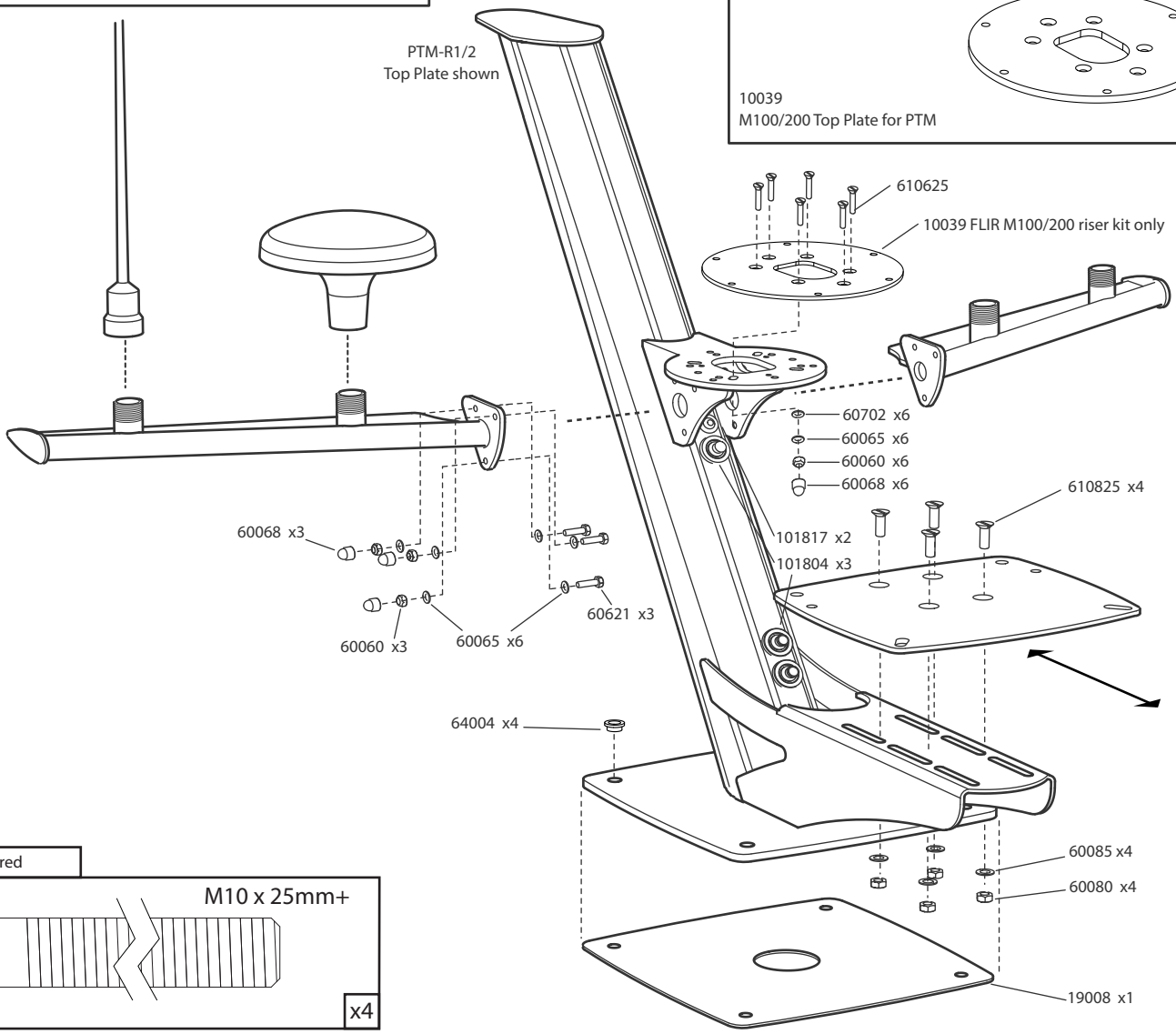

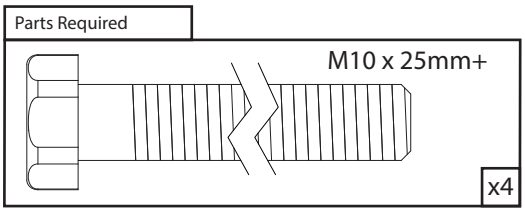

SCANSTRUT